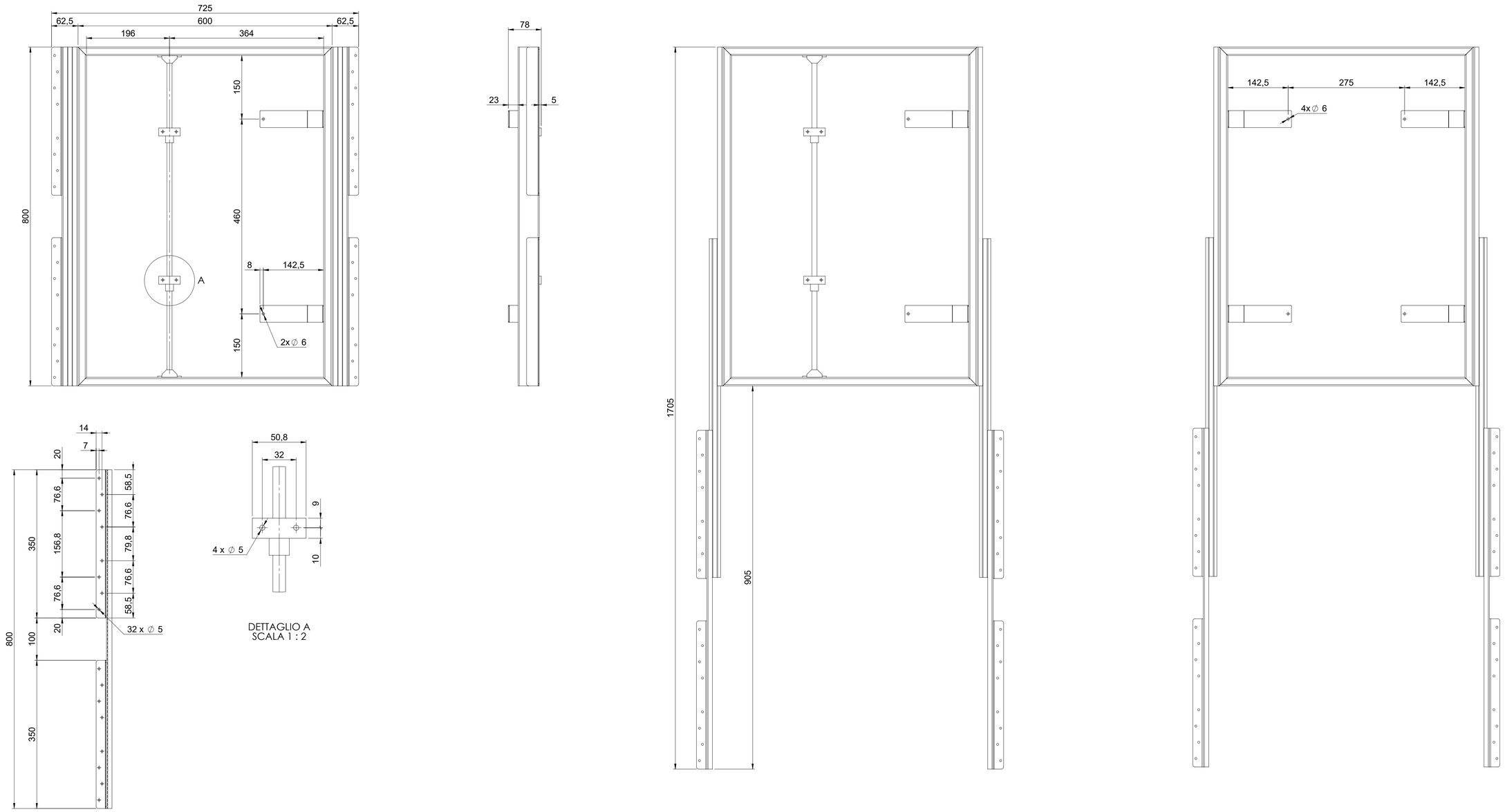

DETTAGLIO A
SCALA 1 : 2

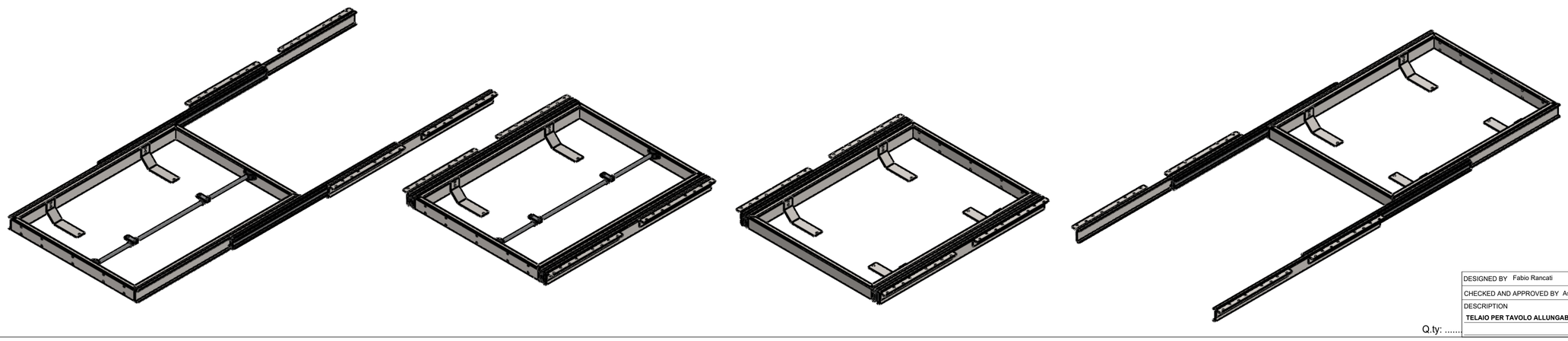

DESIGNED BY Fabio Rancati	Material	Des. Cad Studio RF	RAM INDUSTRIE						
CHECKED AND APPROVED BY Assia d'Alesio	Weight (Kg) 4.00	Date (dd/mm/yyyy) 02/01/2024							
DESCRIPTION TELAIO PER TAVOLO ALLUNGABILE	Surface finish	Scale 1:5	DWG. NO. F60800	Rev. 0					
	Thickness	Chk							

Q.ty: .....

TOLERANCES FOLLOWING ISO 8015
INDICATIONS FOR DIMENSIONS WITHOUT INDIVIDUAL TOLERANCE INDICATIONS ISO 2768-mH

Nominal dimensions (mm)									
0,5	3	6	30	120	400	1000	2000	4000
0,5	6	30	120	400	1000	2000	4000	
± 0,2	± 0,3	± 0,5	± 0,8	± 1,2	± 2	± 3	± 4	

THIS DRAWING IS THE EXCLUSIVE PROPERTY OF RAM INDUSTRIE (THE COMPANY) WITHOUT ANY PRIOR WRITTEN AUTHORIZATION OF THE COMPANY
THIS DRAWING CANNOT BE USED FOR CONSTRUCTION, NEITHER TRANSFERED TO ANY THIRD PARTY OR EVEN PARTIALLY REPRODUCED.
THE COMPANY WILL LEGALLY DEFEND ITS OWN RIGHTS.