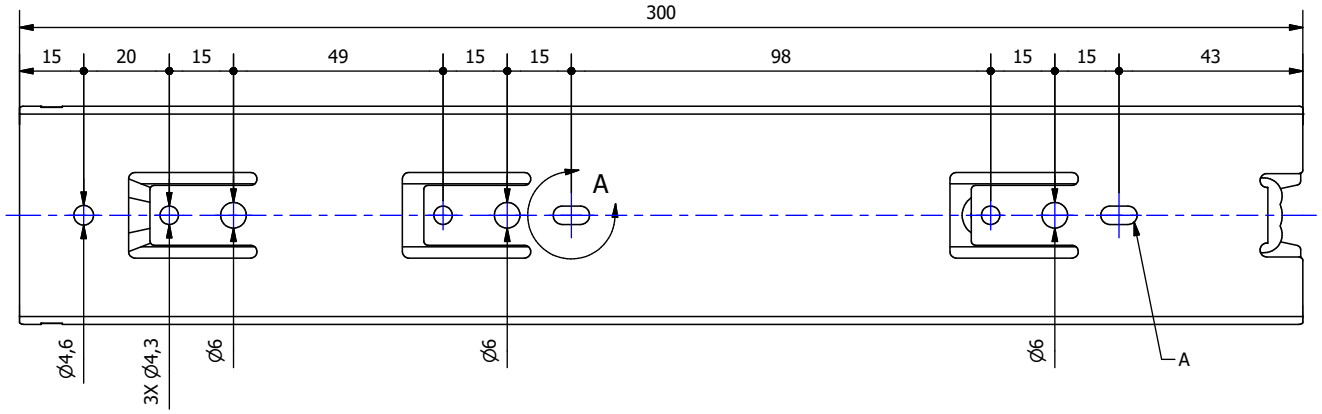

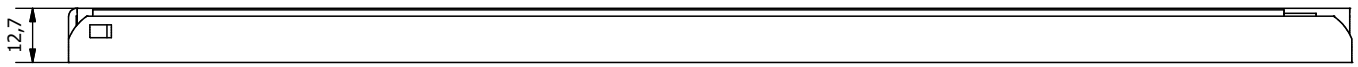

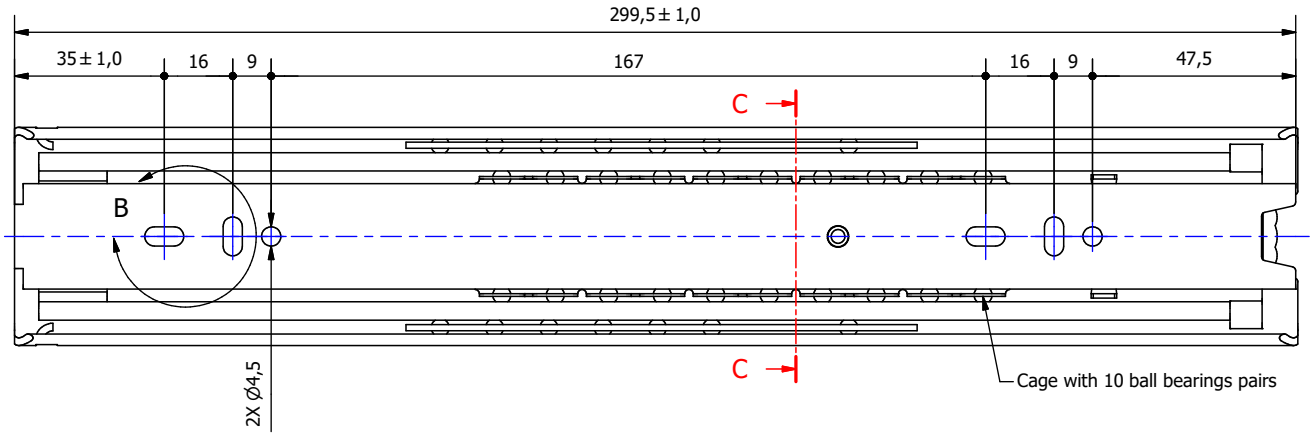

C-C (1:1)

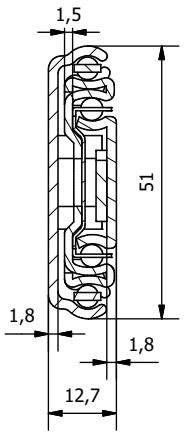

A (1:1)

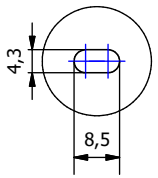

B (1:1)

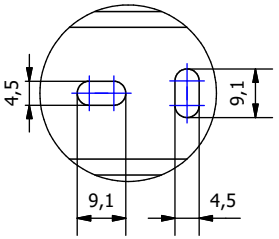

DESIGNED BY	CHECKED AND APPROVED BY	GENERAL TOLLERANCE	DATE	SHEET	CODE
Paula	Assia	SS-ISO-2768-1M	15/09/2025	1 of 2	SH51300
		PACKAGING		CYCLES TEST / SALT SPRAY TEST	REVISION
		DESCRIPTION		MATERIAL: Cold rolled steel	
		DEVICE		PAIR WEIGHT: 1,31 kg	UNIT: A3 / SCALE: 1:1,25

RAM INDUSTRIE

Property of RAM Industrie.
Without its written authorization the present drawing shall neither be used for construction anyway, communicated to third parties, nor reproduced.

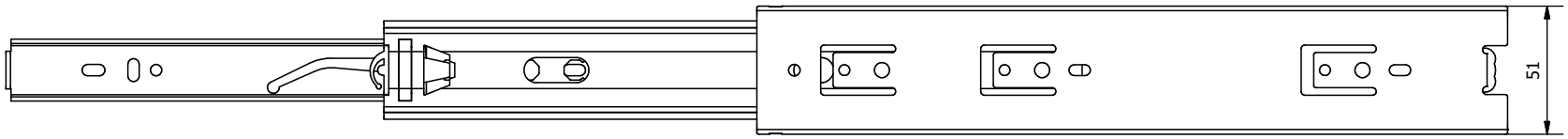

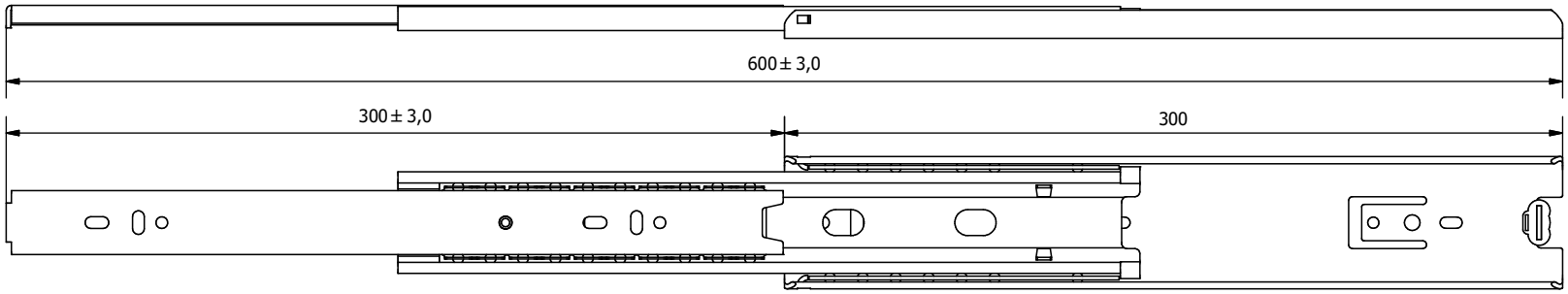

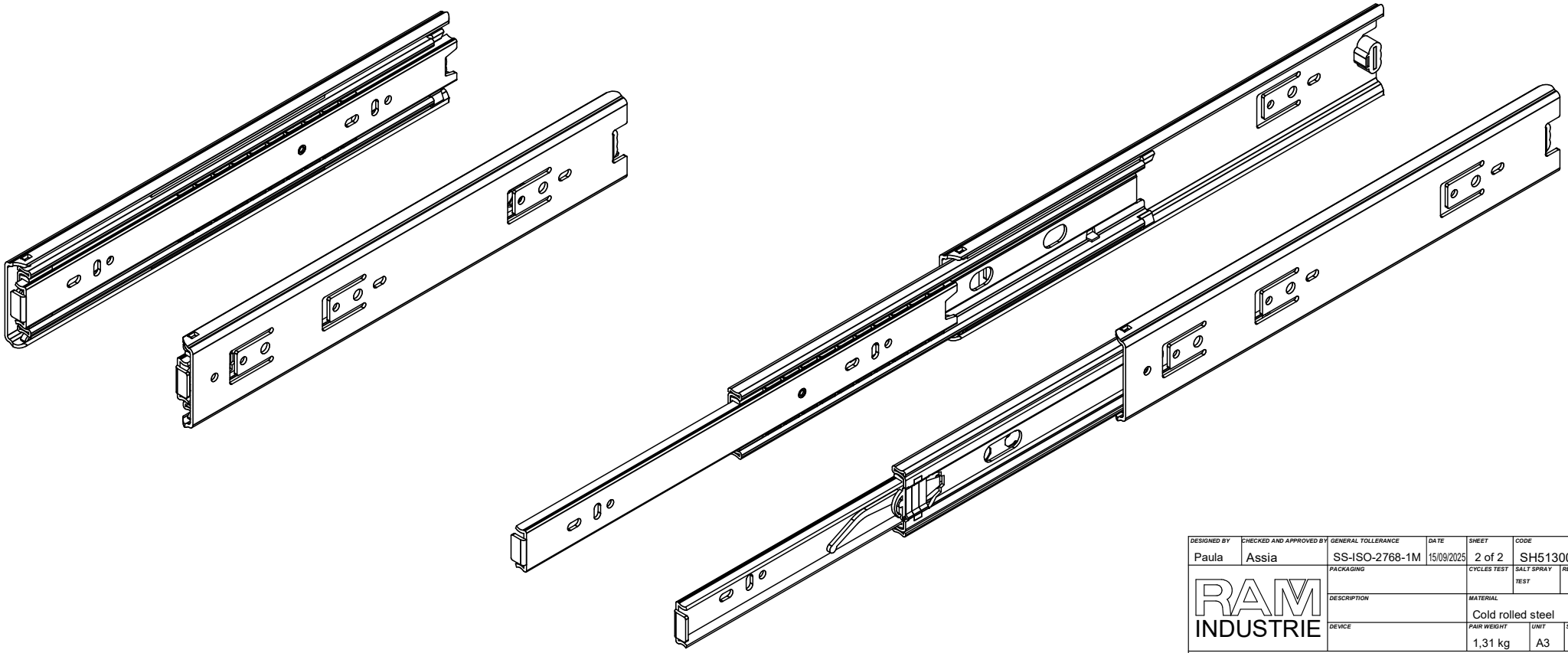

DESIGNED BY	CHECKED AND APPROVED BY	GENERAL TOLLERANCE	DATE	SHEET	CODE
Paula	Assia	SS-ISO-2768-1M	15/09/2025	2 of 2	SH51300
		PACKAGING		CYCLES TEST	SALT SPRAY TEST / REVISION
		DESCRIPTION		MATERIAL: Cold rolled steel	
		DEVICE		PAIR WEIGHT: 1,31 kg	UNIT: A3 / SCALE: 1:2

RAM INDUSTRIE

Property of RAM Industrie.
Without its written authorization the present drawing shall neither be used for construction anyway, communicated to third parties, nor reproduced.